INSTRUCTION MANUAL

Neomounts®

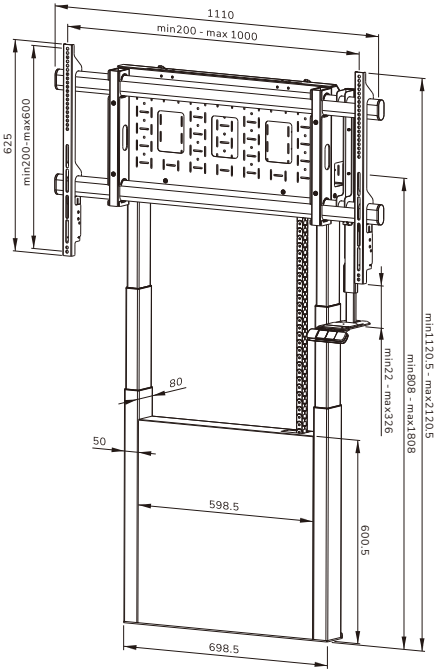

Measuring unit: mm

WL55-885BL1

WL55-885WH1

EN Wall mount
NL Wandsteun
DE Wandhalterung
FR Support mural
IT Supporto a parete
ES Soporte de pared
PT Suporte de parede
DK Vægbeslag
NO Veggfeste
SE Väggfäste
FI Seinäteline
PL Uchwyt ścienny
CS Nástěnný držák
SK Nástenný držiak
RO Suport de perete

Neomounts B.V.
Wateringweg 62, 2031 EJ Haarlem
The Netherlands | neomounts.com

Neomounts®

WL55-885BL1

WL55-885WH1

Tool

200x200 - 1000x600 mm

0-120 kg

BOLT BOX

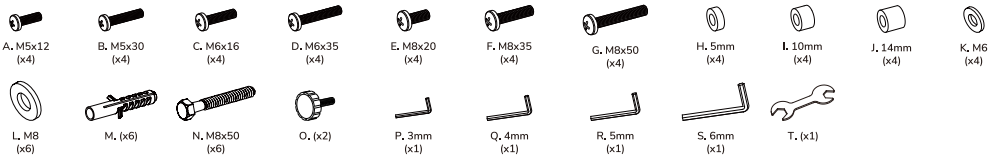

PARTS

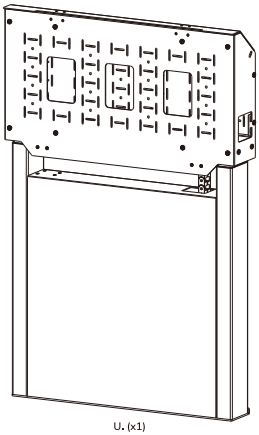
U. (x1)

V. (x1)

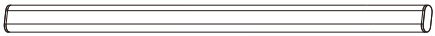
W. (x2)

X. (x2)
Incl. M6x20 (x4)

AA. (x1)
Incl. M6x12 (x2)

Y. (x2)

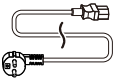
AB. EU-plug 4m (x1)

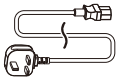
AC. UK-plug 4m (x1)

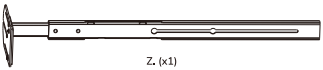
Z. (x1)

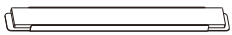
AD. (x1)

PARTS DIAGRAM

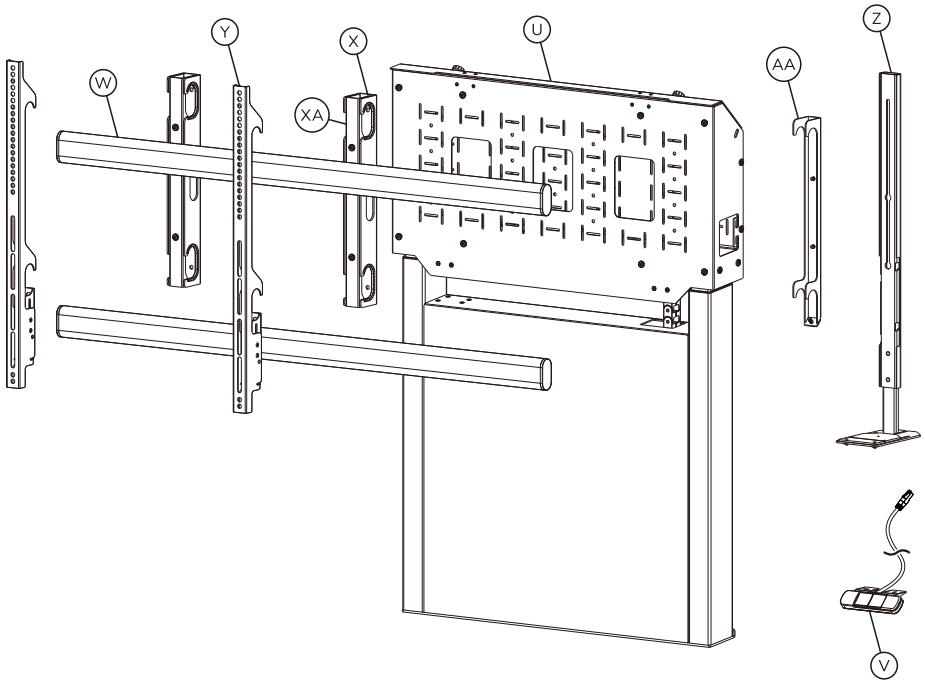

1

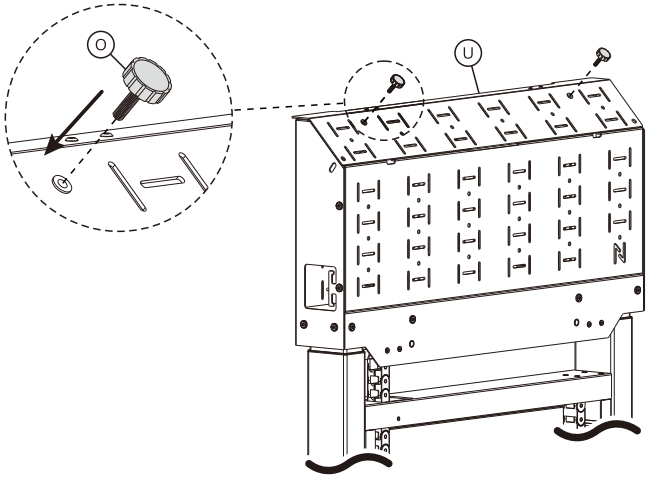

2

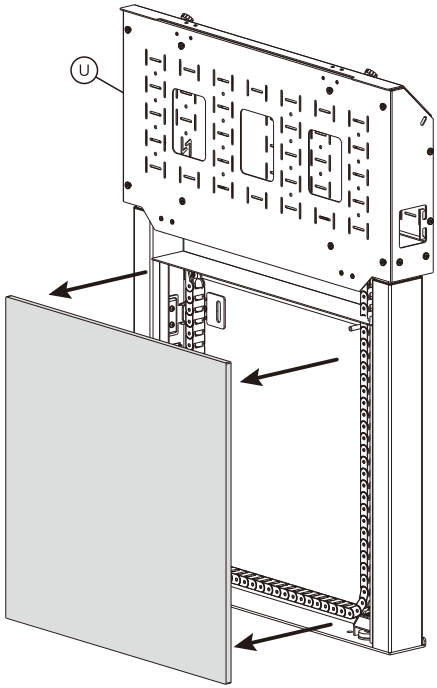

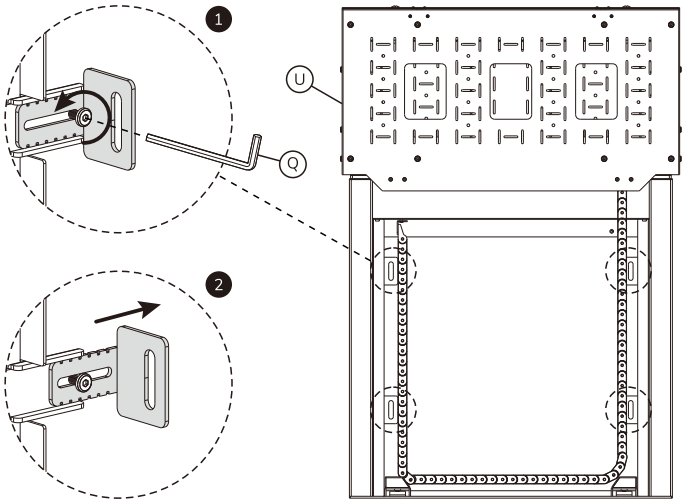
1
U
Q
2

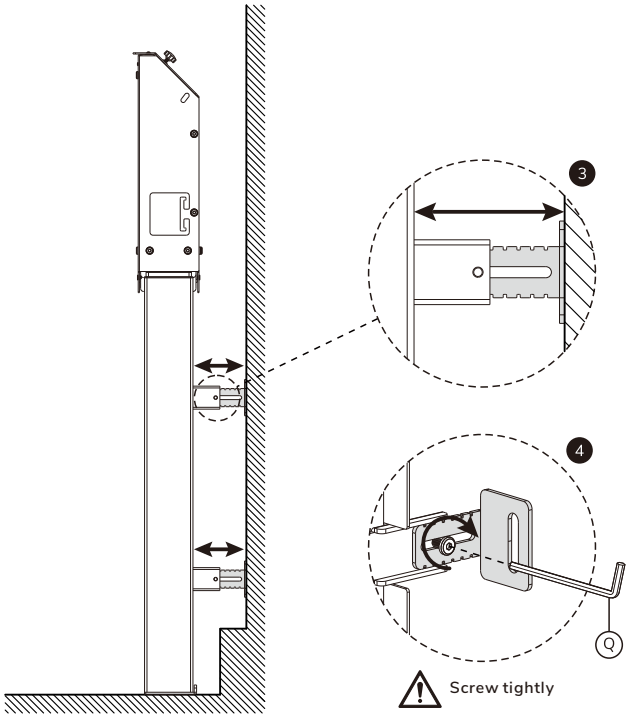
3
4
Q
Screw tightly

4

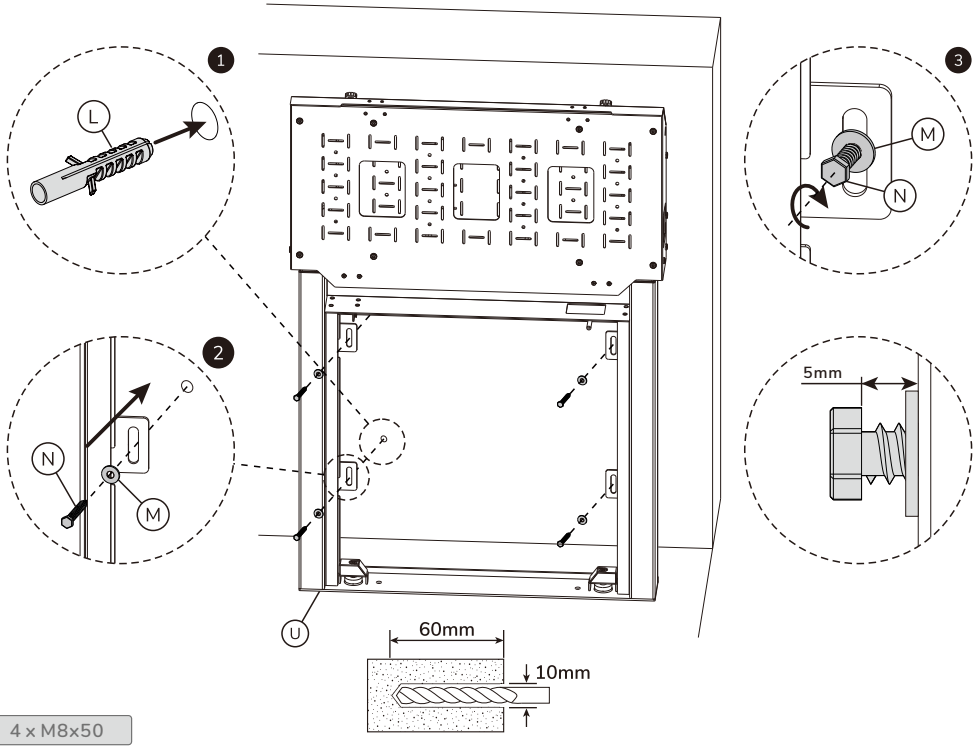

4 x M8x50

OPTION

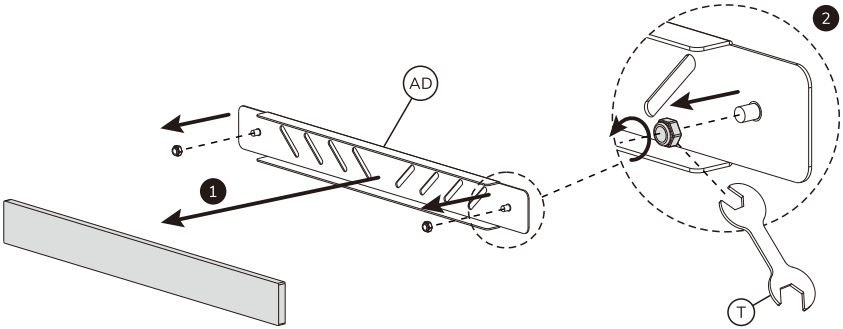

OPTION

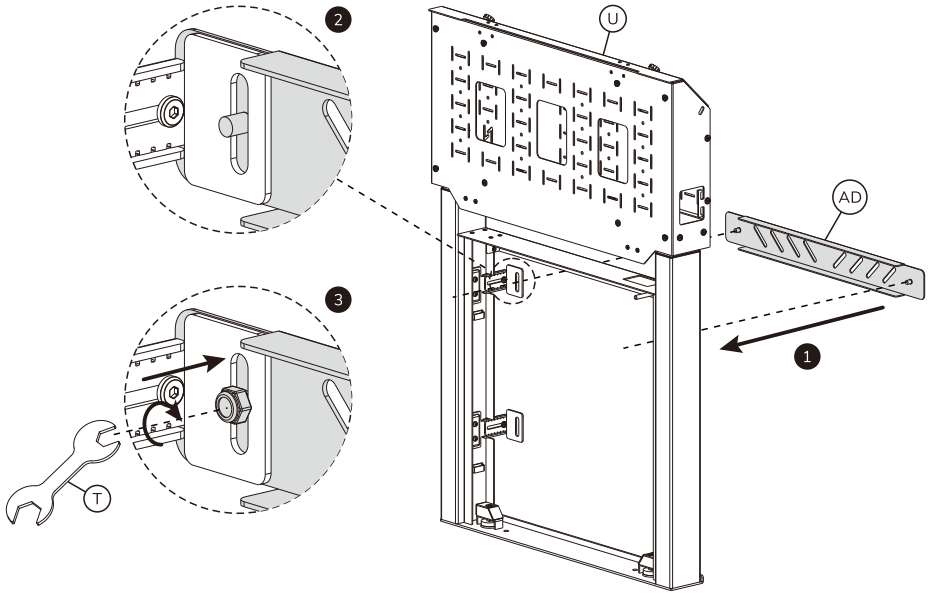

OPTION

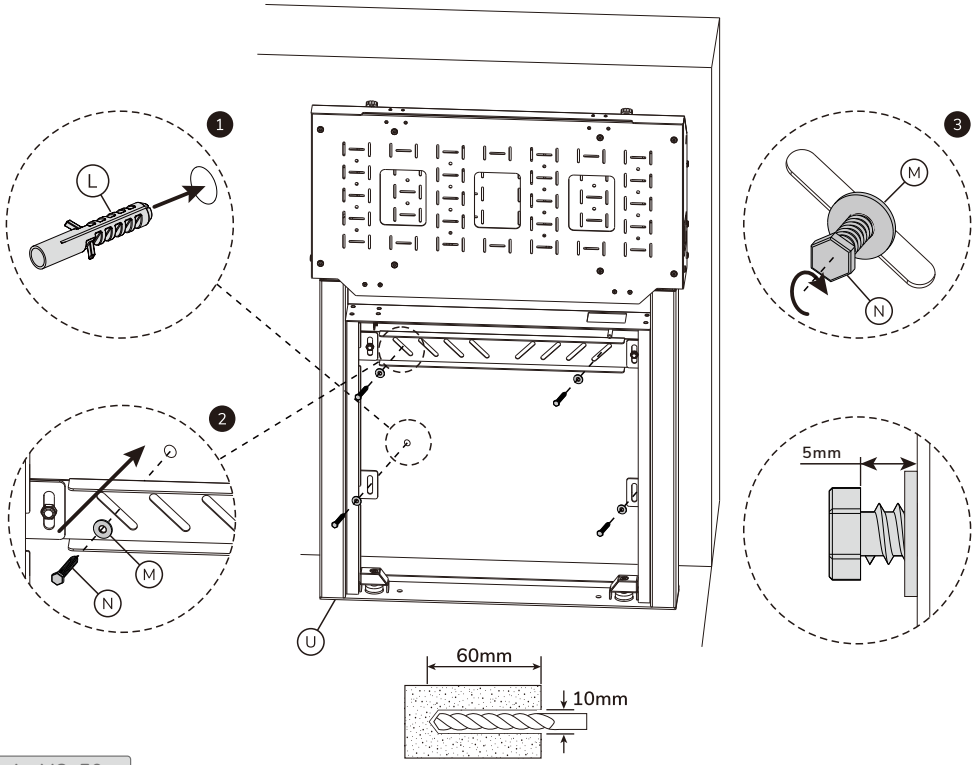

4 x M8x50

5

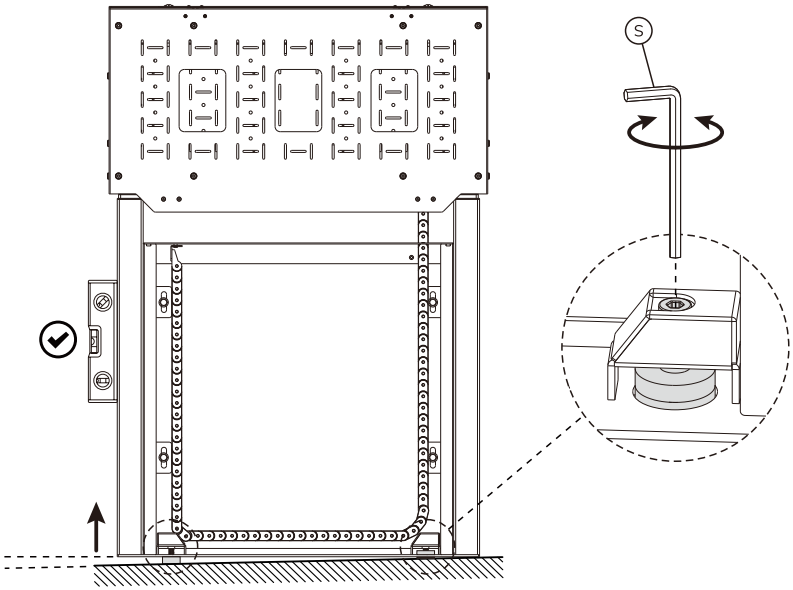

OPTION

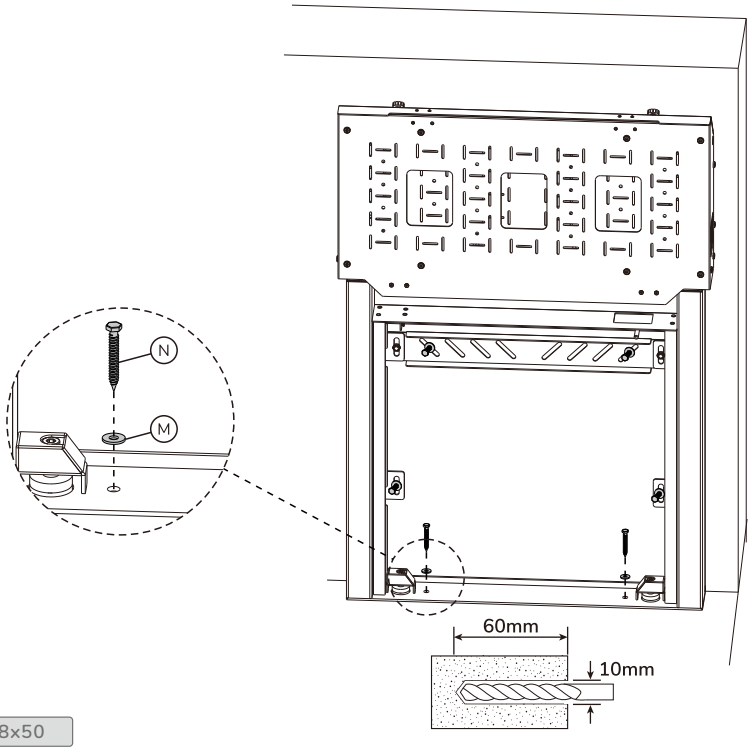

2 x M8x50

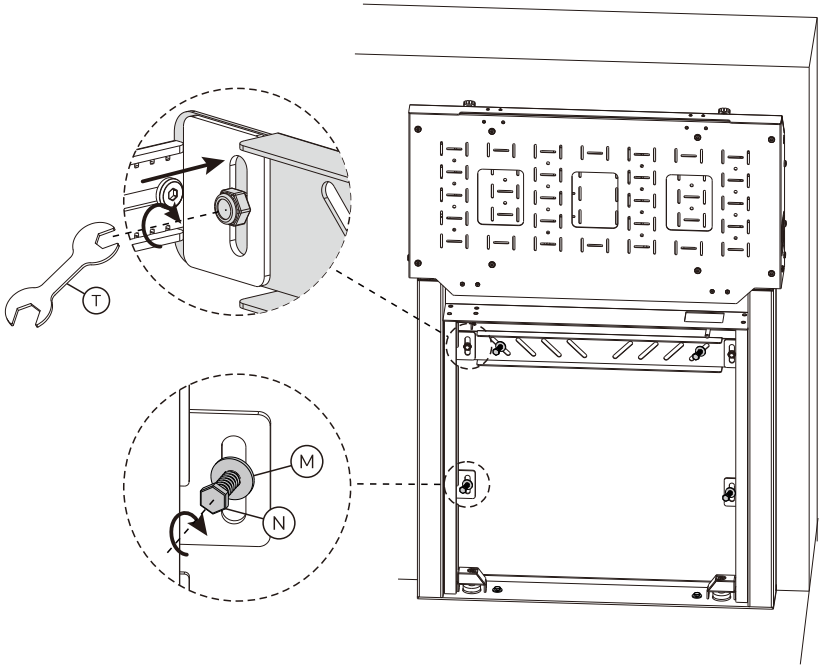
T
M
N

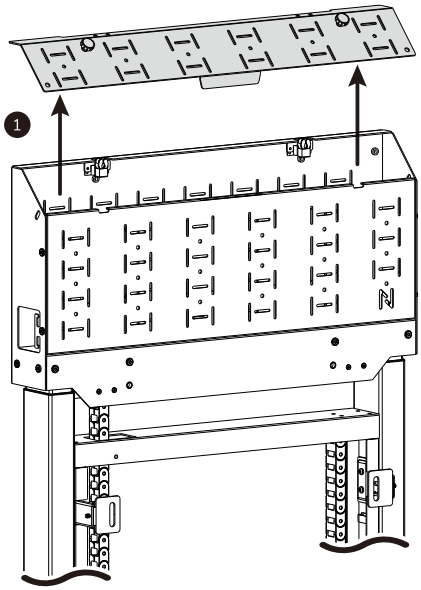
1

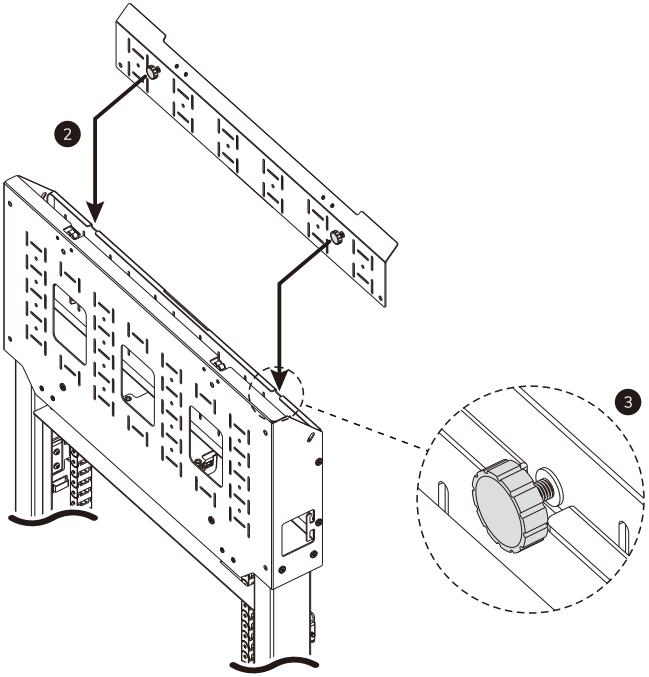
2
3

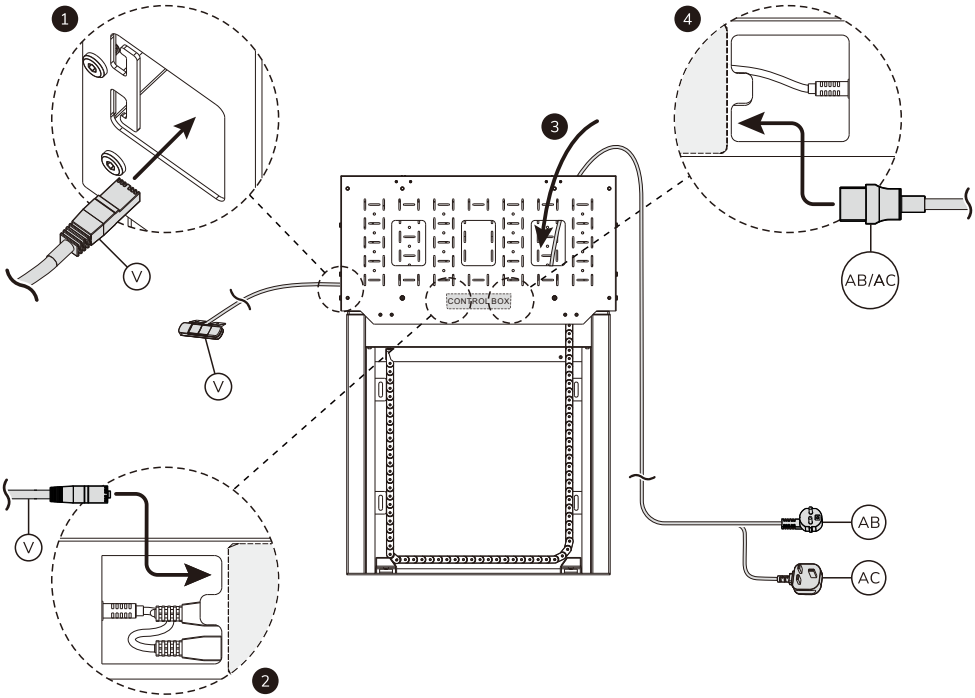

TOP VIEW

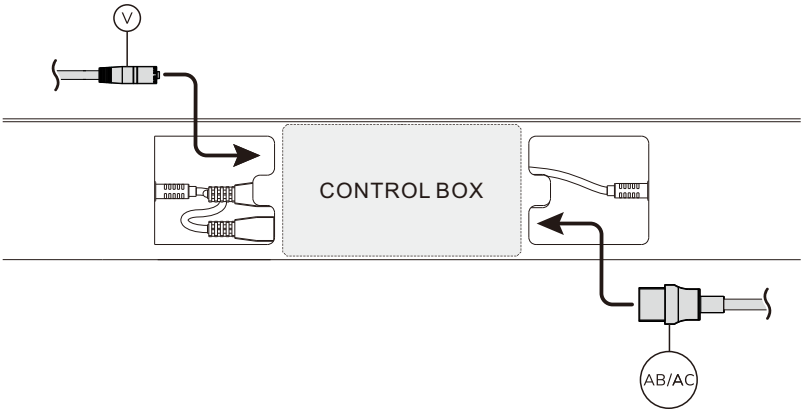

9

System detects and prevents overheating by shutting down approx. 18 minutes after detection. System activates automatically after cooling down.

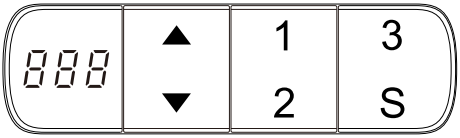

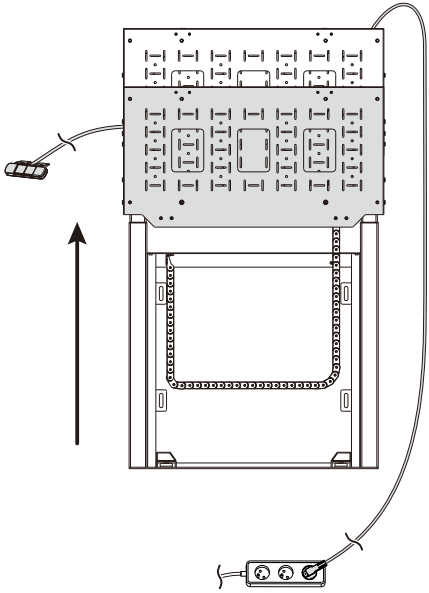

1. When the power is connected, the screen lights up and displays "**LOC**".

2. Unlock: keep pressing "down" and "S" key till display shows "**000**" then release the key.

3. Keep pressing "up" key till the display shows "**025**".

10

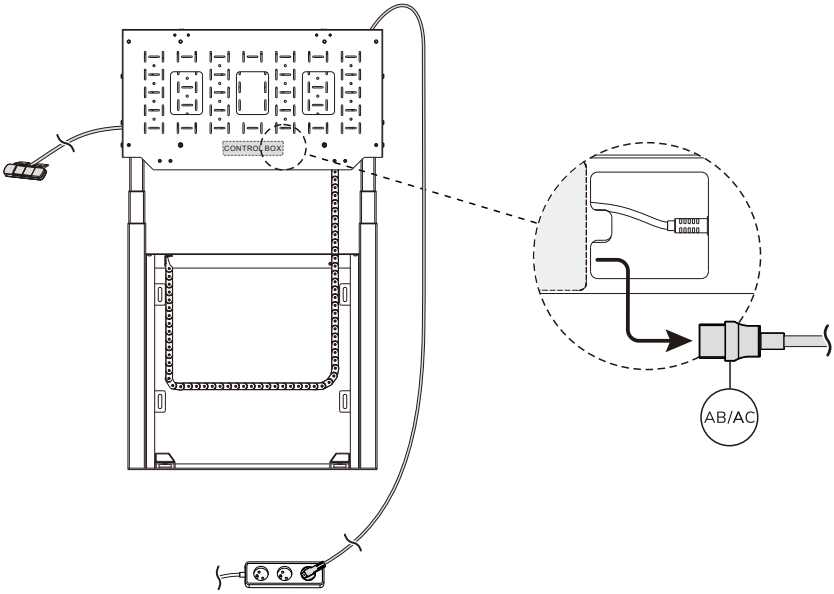

11

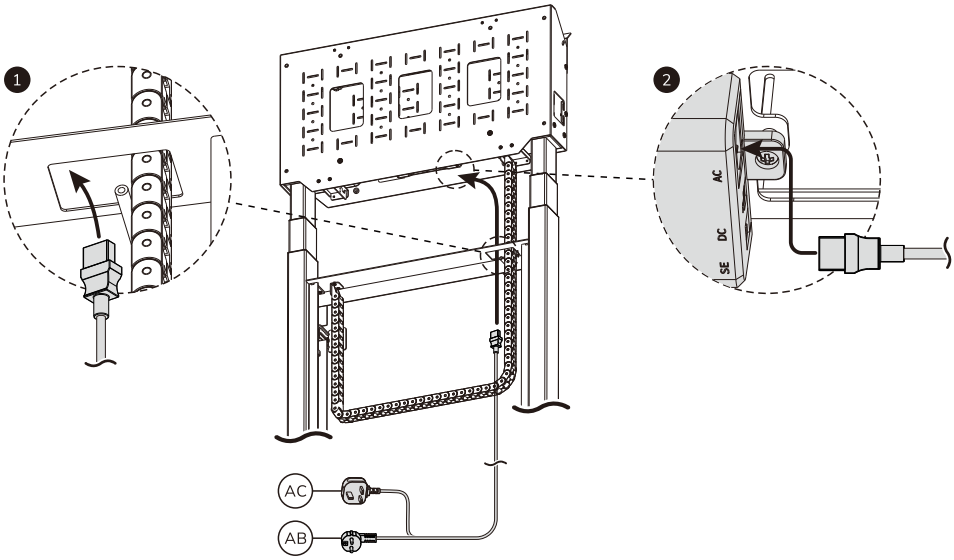

12

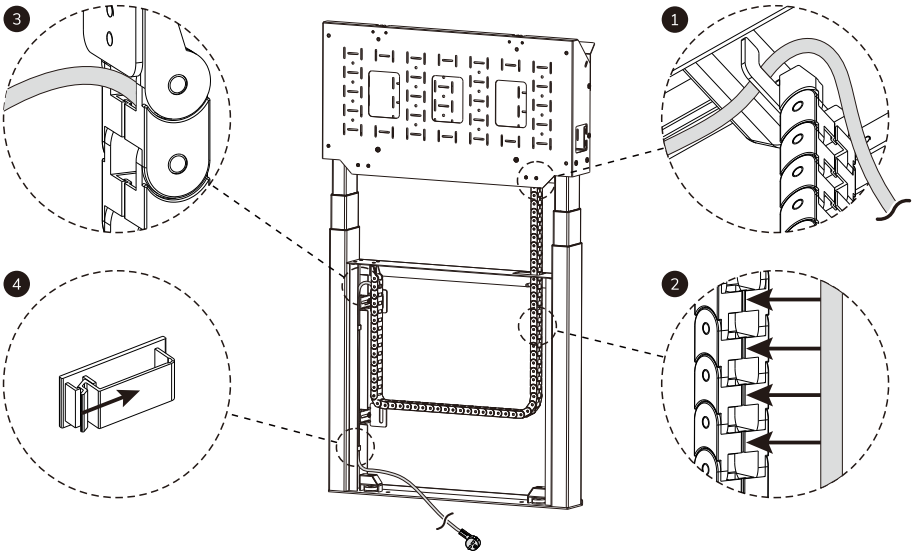

OPTION

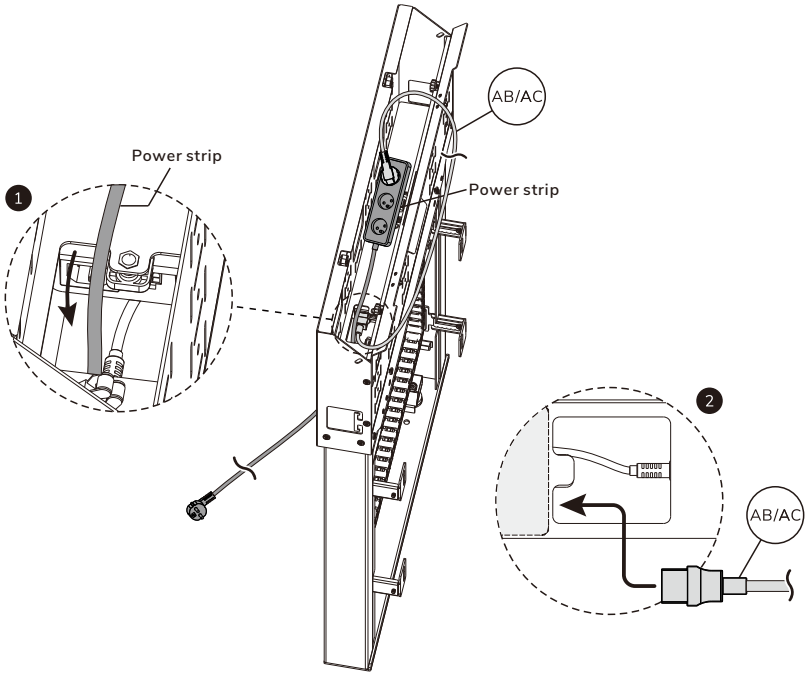

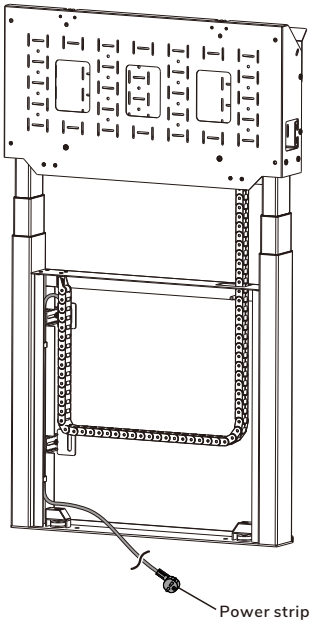

13

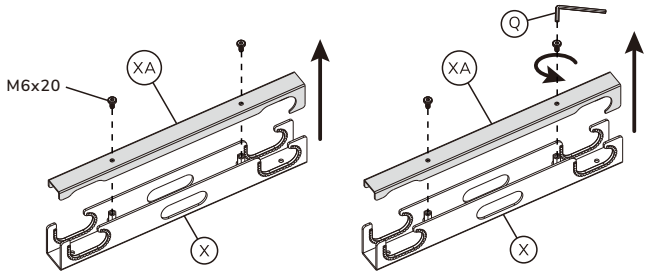

4 x M6x20

14

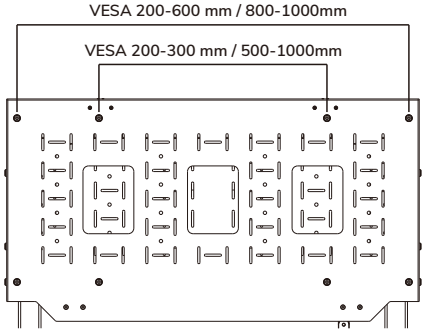

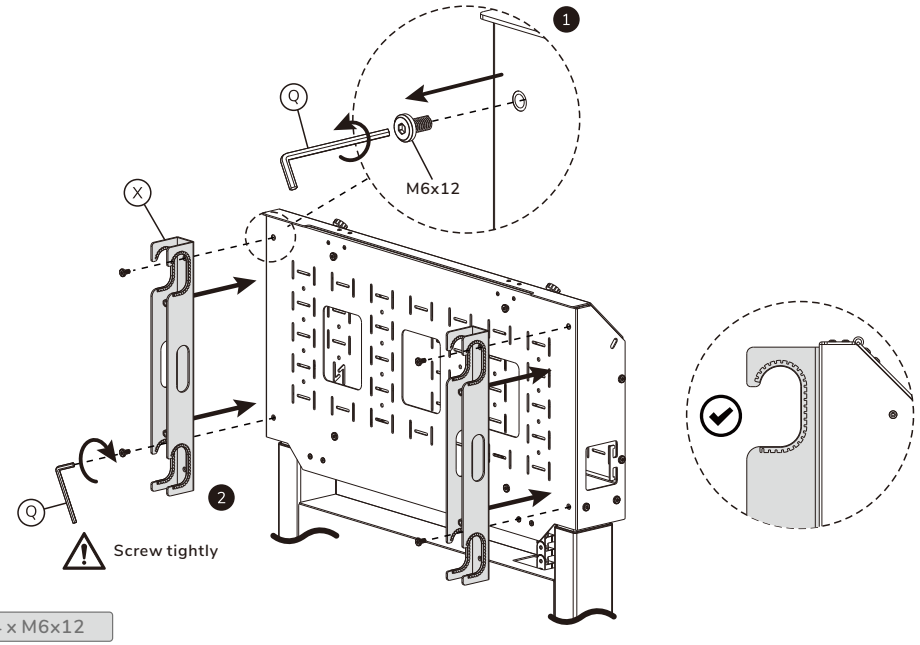

4 x M6x12

15

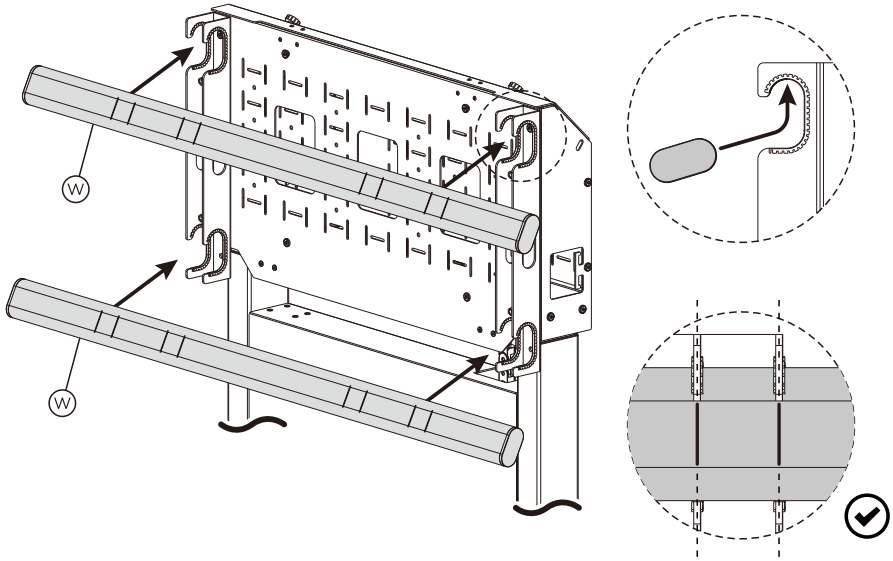

16

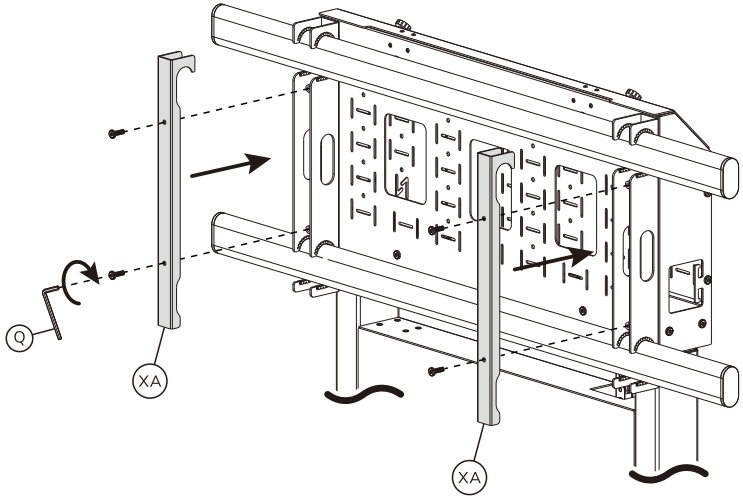

4 x M6x20

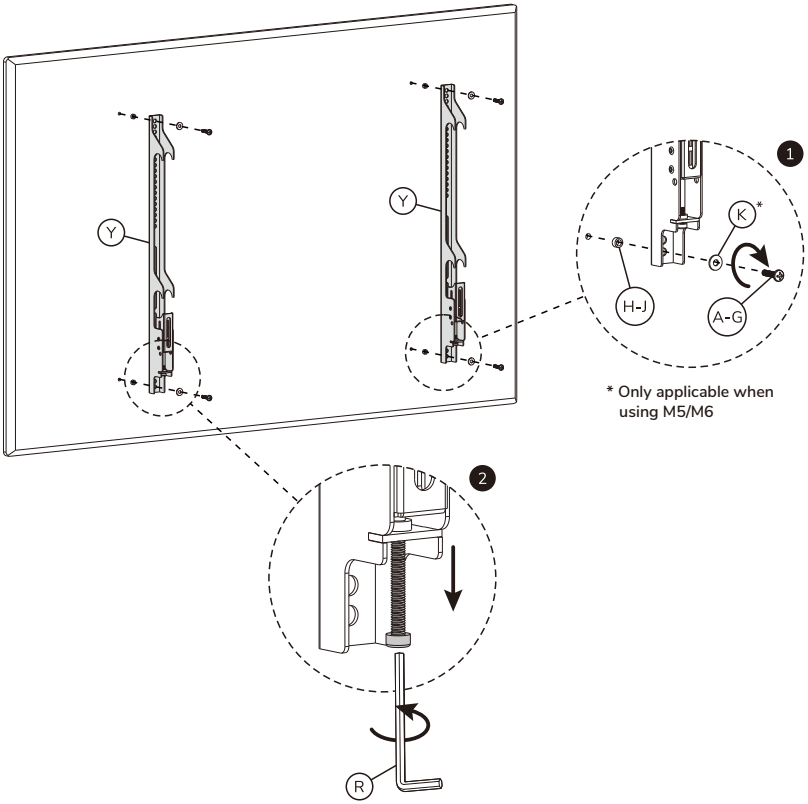

4 x M5/6/8xYY (A-G)

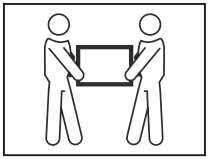

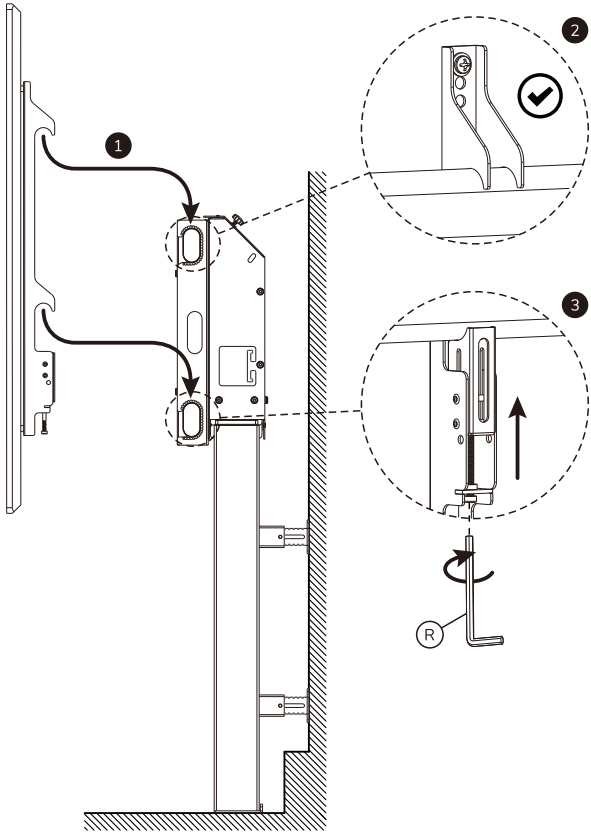
1
2
3
R

19

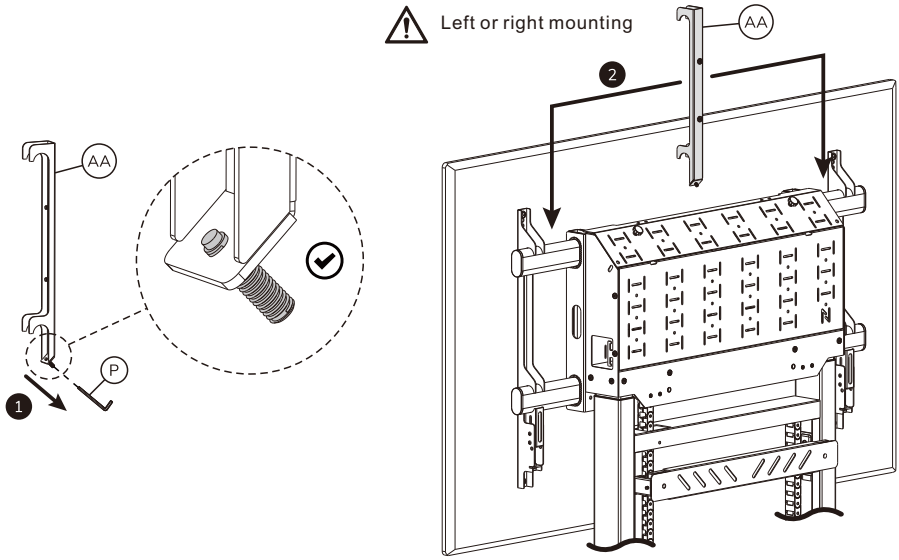

20

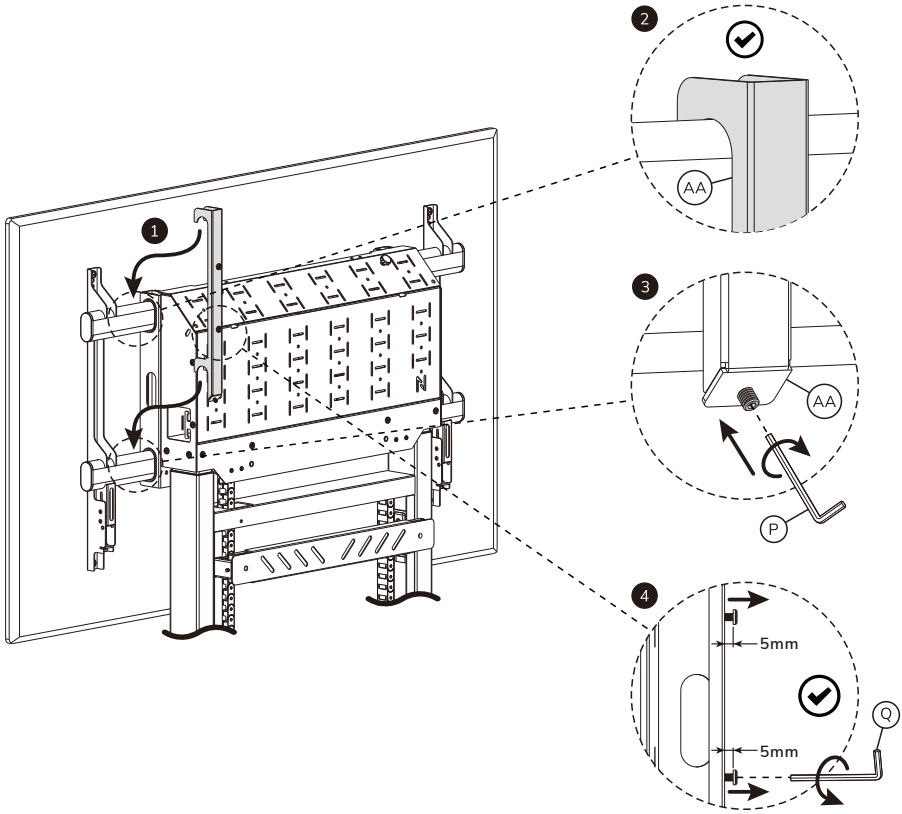

21

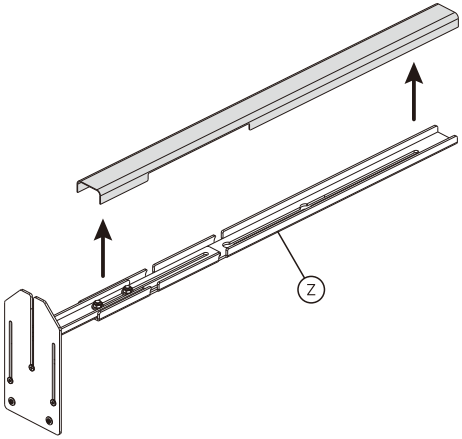

22

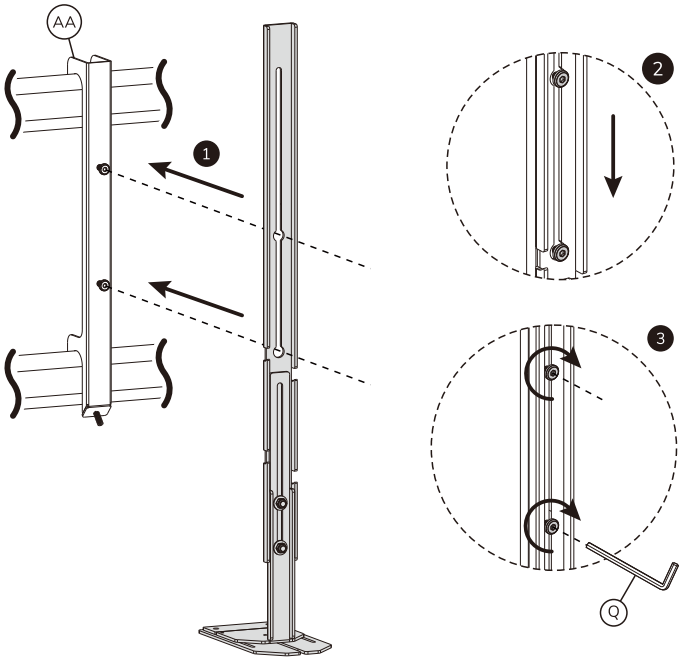

23

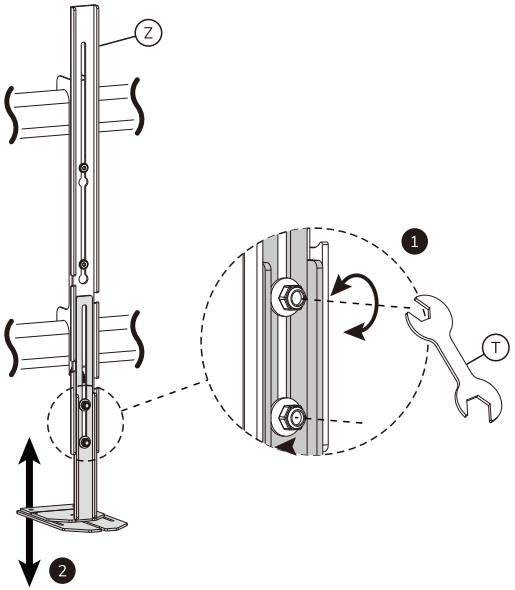

24

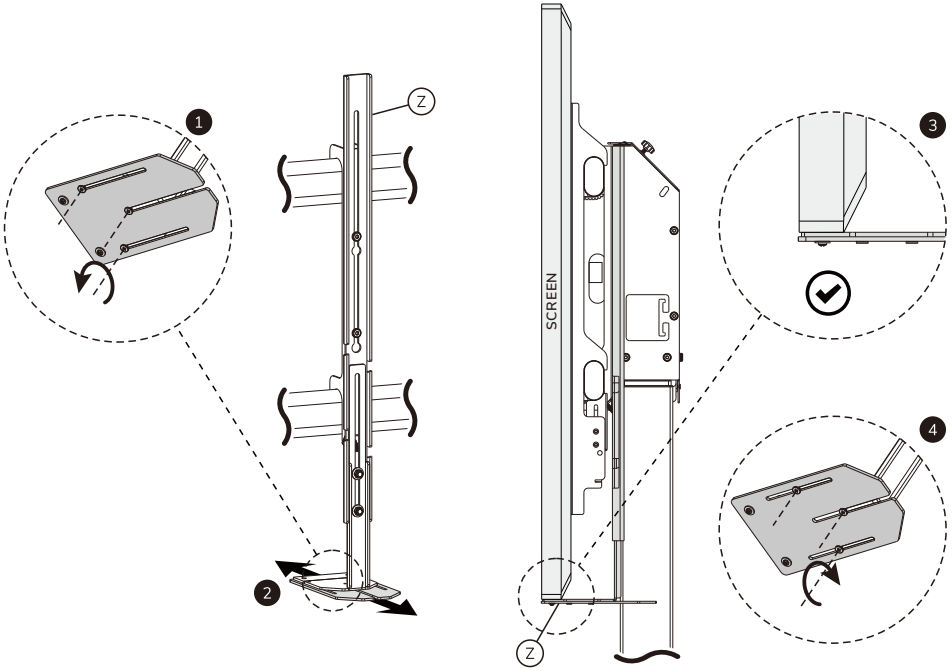

25

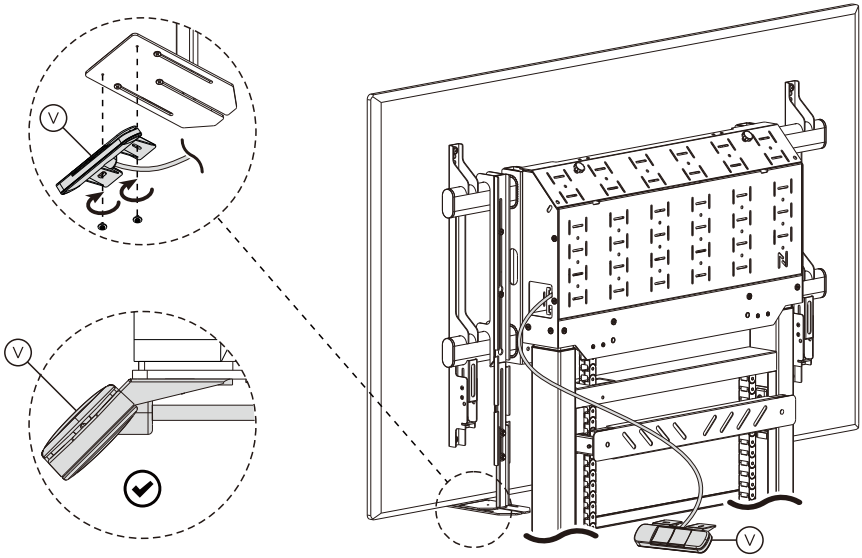

2 x M3x5

26

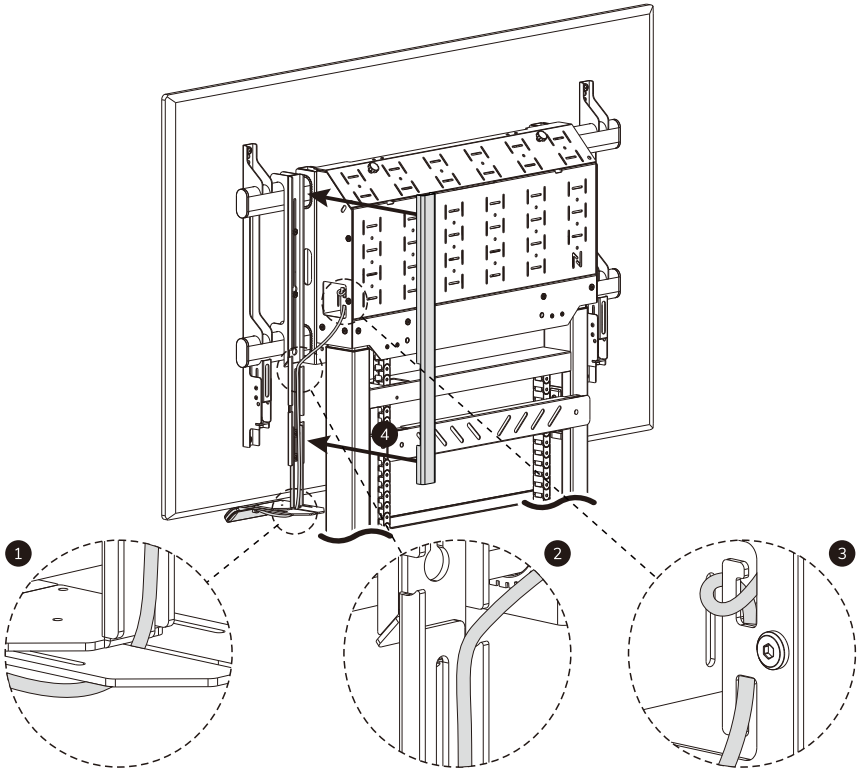

OPTION LOCKS NOT INCLUDED

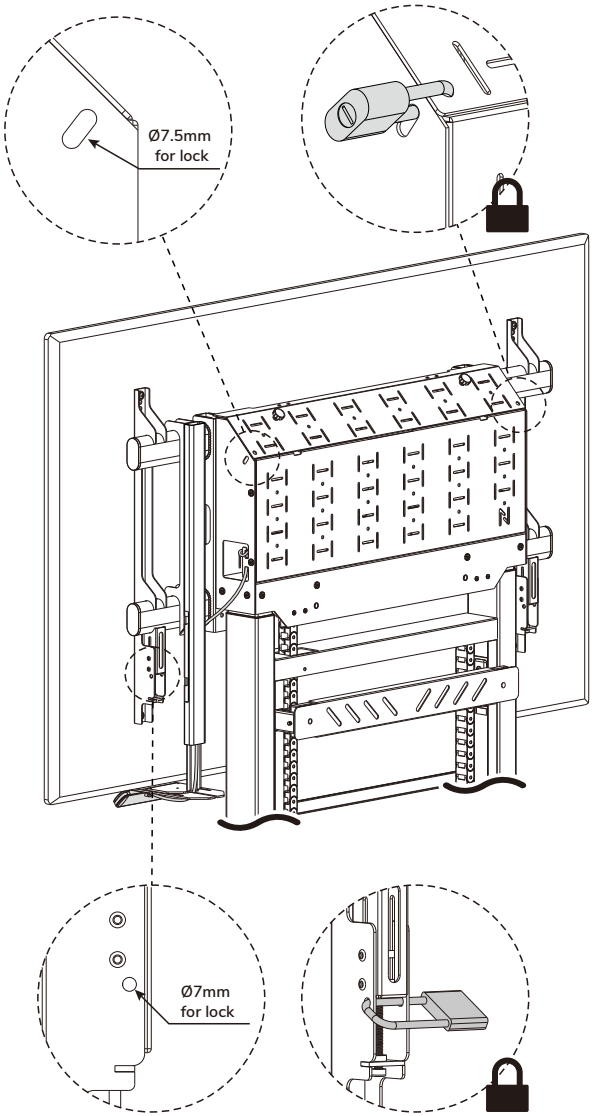

Neomounts®

EC DECLARATION OF CONFORMITY

This Declaration of Conformity is issued under the sole responsibility of the manufacturer.

Manufacturer

Company name:	Neomounts B.V.
Full address:	Wateringweg 62
Postal code:	2031 EJ
Place	Haarlem
Country:	The Netherlands

Description and identification of the machinery

Generic name:	Motorized floor stand
Function:	Motorized height adjustable display lift
Model:	FL55-885 / WL55-885
Commercial name:	Move Lift X

Compliance

The manufacturer declares that the above mentioned machinery fulfils all relevant provisions of

Machinery Directive 2006/42/EG
EMC Directive 2014/30/EU
RoHS Directive 2011/65/EU & delegated directive (EU) 2015/863
WEEE Directive 2012/19/EU

In conjunction with the following harmonised standards and where appropriate other technical standards and specifications

Safety of Machinery

EN ISO 12100:2010;

Safety of Electrical Equipment

EN 60335-1:2012/ A15:2021
EN 62233:2008
EN 63000:2018

Electromagnetic Compatibility (EMC)

EN 55014-1:2017/ A11:2020
EN 55014-2:1997/ A2:2008
EN 61000-3-2:2014
EN 61000-3-3:2013

Technical documentation for the product is available from:

Name:	Neomounts B.V.
Full address:	Wateringweg 62, 2031 EJ Haarlem, The Netherlands

Place of issue:	Haarlem, The Netherlands
Date of issue:	June 29, 2026

Name:	Barry Meester
Function:	Head of Product Management

Signature:

IMPORTANT HAZARD & SAFETY NOTES

Please read the safety and installation instructions in this product manual carefully, before starting the installation. Failure to read, thoroughly understand and follow all instructions may result in serious personal injury, damage to the equipment or voiding of factory warranty. Original instructions. Make sure to keep this manual in a safe place.

General safety instruction

This motorised height-adjustable trolley is designed to safely lift, lower, support, and move flat panel displays weighing up to 120 kg (264,6 lbs). The integrated motorized column provides smooth powered height adjustment, enabling ergonomic positioning for different users and applications. The robust wheelbase allows the mounted display to be relocated within indoor environments without the need for disassembly, ensuring flexibility of use. This product is intended for professional AV and IT applications such as classrooms and training facilities, meeting and conference rooms, exhibitions and showrooms, and public information environments. It is not intended for outdoor use or uneven terrain, transport in vehicles or over long distances, loads other than compatible flat panel displays, use beyond the rated maximum weight capacity.

Use the appropriate tools and equipment when installing the motorised product. Not using appropriate equipment may result in severe risk of injury. The stability can be impaired when attaching to furniture. Do not use when defective. This product can be used by children aged from 8 years and above and persons with reduced physical, sensory or mental capabilities or lack of experience and knowledge if they are under supervision or have been given instruction concerning the use of the product in a safe way and understand the hazards involved. Children shall not play with the product. Cleaning and user maintenance shall not be made by children without supervision. Noise levels during operation do not exceed 70 dB(A).

Electrical safety

Connect unit to a free accessible 100-240V, 50/60 Hz grounded power outlet only. Make sure the unit can be immediately separated from the power outlet.
Only use unit in dry rooms, protect unit from water and other liquids. Only wipe unit with dry cloth.
Do not open lift unit. RISK OF ELECTRIC SHOCK. There are no serviceable parts inside.
In case of disfunction unplug unit from power outlet and call an authorised technical service person.
Do not overrun or damage cables in any other way.
Replace damaged cables immediately with new one from same type.

Mechanical safety

Do not improperly load unit. Do not mount other than original parts in conjunction with original mounting parts. Do not hang on unit.
Only use original mounting parts provided with the system. Do not exceed the maximum load of 120 kg (264,6 lbs). Assure installation of unit by authorized service person only. Before moving the unit up or down assure at least a safety distance of 20 cm/8 inch from any part of the unit to any other fitment in order to avoid shear traps or squeezing points. In case of any incident, please release operating panel. Movement of unit will stop immediately.

The socket connections of the unit and the wall socket must be easily accessible. Disconnect the power cable from the wall socket before moving the product.

Moveable and free standing units

Only operate unit on flat and stable floor surfaces. Move unit on flat floors only.
Risk of tilting when overrunning unevenness in floors, door sills and similar.
VERY HEAVY UNIT.
Severe risk of injury should the unit fall over. Lock brakes of all wheels when operating unit. Always relocate the floor stand with screen in the lowest position.

The device is not drip or splash water proof. Do not place liquids on or nearby or spray the device. Always unplug the unit from the wall socket before cleaning to reduce the risk of electric shock.

Anti-collision protection

The protection system is designed to detect contact between the lift system and an object. This system is intended for protection of the motorised screen lift. The system is explicitly not intended as a safety mechanism to prevent personal injury.

Instructions for disposal

Do not discard with general waste.

UK DECLARATION OF CONFORMITY

This Declaration of Conformity is issued under the sole responsibility of the manufacturer.

Manufacturer

Company name:	Neomounts B.V.
Full address:	Wateringweg 62
Postal code:	2031 EJ
Place	Haarlem
Country:	The Netherlands

UK Authorised Representative

Which is established in the United Kingdom and has access to the Technical File

Company name:	Neomounts UK Ltd
Full address:	Preston Park House, South Road
Postal code:	BN1 6SB
Place:	Brighton, East Sussex
Country:	United Kingdom

Description and identification of the machinery

Generic name:	Motorized floor stand
Function:	Motorized height adjustable display lift
Model:	FL55-885 / WL55-885
Commercial name:	Move Lift X

The object of the declaration described above is in conformity with the relevant UK Statutory Instruments (and their amendments)

2008 No. 1597	Supply of Machinery (Safety) Regulations 2008
2012 No. 3032	The Restriction of the Use of Certain Hazardous Substances in Electrical and Electronic Equipment Regulations 2012
2016 No. 1091	Electromagnetic Compatibility Regulations 2016
2013 No. 3113	Waste Electrical and Electric Equipment Regulations 2013

References to the relevant designated standards used or references to the other technical specifications in relation to which conformity is declared:

Safety of Machinery

EN ISO 12100:2010;

Safety of Electrical Equipment

EN 60335-1:2012/ A15:2021
EN 62233:2008
EN 63000:2018

Electromagnetic Compatibility (EMC)

EN 55014-1:2017/ A11:2020
EN 55014-2:1997/ A2:2008
EN 61000-3-2:2014
EN 61000-3-3:2013

Signed for and on behalf of:

Name:	Neomounts B.V.
Full address:	Wateringweg 62, 2031 EJ Haarlem, The Netherlands
Place of issue:	Haarlem, The Netherlands
Date of issue:	June 29, 2026
Name:	Barry Meester
Function:	Head of Product Management

Signature:

EN ⚠ CAUTION

1. To ensure safety, please read this manual carefully before installation and follow the instructions. Store this manual in a secure place for future reference.
2. The manufacturer shall not be legally responsible for any equipment damage or personal injury caused by incorrect installation or operation other than that covered in this manual.
3. The mount is designed for easy installation and removal. The manufacturer shall not be liable for damage to equipment or personal injuries arising out of human factors or acts of nature, such as earthquake or typhoon.
4. It is recommended that the mount be installed by qualified personnel only.
5. At least two persons are needed to install or remove the product to avoid hazard of falling objects.
6. Please carefully inspect the area where the mount is to be installed:
   - Avoid places that are subject to high temperatures, humidity or contact with water.
   - Do not install the product near air conditioning vents or areas with excess dust and fumes.
   - Only install on vertical walls and avoid slanted surfaces.
   - Do not install in places subject to any shock or vibration.
   - Do not install in places subject to direct exposure to bright light, as it may cause eye fatigue when viewing the display panel.
7. Maintain sufficient space around the display to ensure adequate ventilation.
8. To ensure safe installation, first check the structure of the wall, ceiling or floor and select a secure mounting location.
9. The wall, ceiling or floor should be strong enough to sustain a weight of at least four times of the display and mount combined. The mounting location must be able to withstand earthquake or other strong shock.
10. Do not modify any accessories or use broken parts. Contact your dealer with any questions.
11. Tighten all screws (do not exert excessive force to avoid breaking the screw or damaging its thread).
12. Drill holes and bolts will be left in the wall, ceiling or floor once the display and bracket are removed. Stains may occur after extended use.
13. Since the manufacturer has no way to control the wall, ceiling or floor type and installation of the mount, the warranty of the product shall only cover the body of the mount. The warranty period of the product is 5 years.
14. Please consult the English language manual for any dispute on conditions.

DE ⚠ VORSICHT

1. Um die Sicherheit zu gewährleisten, lesen Sie dieses Handbuch vor der Installation sorgfältig durch und befolgen Sie die Anweisungen. Bewahren Sie dieses Handbuch an einem sicheren Ort auf, damit Sie später darauf zurückgreifen können.
2. Der Hersteller ist rechtlich nicht verantwortlich für Geräteschäden oder Personenschäden, die durch eine andere als die in diesem Handbuch beschriebenen Installation oder Bedienung verursacht werden.
3. Das Produkt ist für eine einfache Installation und Demontage ausgelegt. Der Hersteller haftet nicht für Schäden an Geräten oder Personenschäden, die durch menschliche Faktoren oder Naturereignisse wie Erdbeben oder Taifun verursacht werden.
4. Es wird empfohlen, das Produkt nur durch qualifiziertes Personal zu installieren.
5. Zur Installation oder Demontage des Produktes sind mindestens zwei Personen erforderlich, um die Gefahr von herabfallenden Gegenständen zu vermeiden.
6. Bitte überprüfen Sie den Bereich, in dem das Produkt installiert werden soll sorgfältig:
   - Vermeiden Sie Orte die hohen Temperaturen, Feuchtigkeit oder Kontakt mit Wasser ausgesetzt sind.
   - Installieren Sie das Produkt nicht in der Nähe von Lüftungsschlitzen von Klimaanlagen oder Bereichen mit übermäßigem Staub und Rauch.
   - Installieren Sie das Produkt nur an eine vertikale Wand, Vermeiden Sie schräge Oberflächen.
   - Nicht an Orten installieren, die Erschütterungen oder Vibrationen ausgesetzt sind.
   - Nicht an Orten installieren die direkter Sonneneinstrahlung bzw. zu starkem Licht ausgesetzt sind, da dies beim Betrachten der Bildschirmanzeige zu Ermüdung der Augen führen kann.
7. Sorgen Sie für ausreichend Platz um das Display, um eine ausreichende Belüftung zu gewährleisten.
8. Um die Sicherheit zu gewährleisten und Unfälle zu vermeiden ist es notwendig vor der Installation die Wand-, Decken- oder Bodenstruktur zu überprüfen und eine sichere Stelle auszuwählen.
9. Die Oberfläche, Wand, Decke oder der Boden sollten stark genug sein, um ein Gewicht von mindestens dem Vierfachen des kombinierten Displays und des Montagesets zu tragen. Der Montageort muss Erdbeben oder anderen starken Erschütterungen stand halten können.
10. Modifizieren Sie kein Zubehör und verwenden Sie keine beschädigten Teile. Wenden Sie sich bei Fragen bitte an Ihren Händler.
11. Ziehen Sie alle Schrauben fest (üben Sie keine übermäßige Kraft aus, um ein Brechen der Schraube oder eine Beschädigung des Gewindes zu vermeiden).
12. Nach dem Entfernen des Produktes können Löcher und Schrauben in Wand, Decke oder Boden verbleiben. Nach längerem Gebrauch können Flecken auftreten.
13. Der Hersteller hat keinen Einfluss auf die Wand-, Decken- oder Bodenart und die Installation der Halterung. Deshalb deckt die Garantie des Produktes nur das Produkt selbst ab. Die Garantiezeit des Produktes beträgt 5 Jahre.
14. Bei Streitigkeiten über die Bedingungen ziehen Sie bitte das englischsprachige Handbuch hinzu.

FR ⚠ ATTENTION

1. Pour assurer la sécurité, veuillez lire attentivement ce manuel avant l'installation et suivre les instructions. Conservez ce manuel dans un endroit sûr pour un besoin ultérieur.
2. Le fabricant ne sera pas légalement responsable de tout dommage à l'équipement ou de blessure corporelle causé par une installation ou une utilisation incorrecte autre que celles préconisées dans ce manuel.
3. Le produit est conçu pour une installation et un démontage faciles. Le fabricant ne peut être tenu responsable des dommages à l'équipement ou des blessures corporelles résultant de facteurs humains ou d'actes de nature, tels qu'un tremblement de terre ou un typhon.
4. Il est recommandé que le produit soit installé uniquement par du personnel qualifié.
5. Au moins deux personnes sont nécessaires pour installer ou démonter le produit afin d'éviter tout risque de chute d'objets.
6. Veuillez inspecter soigneusement la zone où le produit doit être installé:
   - Évitez les endroits soumis à des températures élevées, à l'humidité ou au contact avec de l'eau.
   - N'installez pas le produit à proximité de bouches de climatisation ou de zones avec un excès de poussière et de fumées.
   - Installez uniquement sur des murs verticaux et évitez les surfaces inclinées.
   - Ne pas installer dans des endroits soumis à des chocs ou des vibrations.
   - Ne l'installez pas dans des endroits soumis à une exposition directe à la lumière vive, car cela peut provoquer une fatigue oculaire lors de la visualisation des écrans d'affichage.
7. Maintenez un espace suffisant autour de l'écran pour assurer une ventilation adéquate.
8. Pour garantir une installation sûre, vérifiez d'abord la structure de la surface, du mur, du plafond ou du sol et sélectionnez un emplacement de montage sécurisé.
9. La surface, le mur, le plafond ou le sol doivent être suffisamment solides pour supporter un poids d'au moins quatre fois l'écran et le produit combinés. L'emplacement de montage doit pouvoir résister aux tremblements de terre ou à d'autres chocs violents.
10. Ne modifiez aucun accessoire et n'utilisez pas de pièces cassées. Contactez votre revendeur pour toute question à ce sujet.
11. Serrez toutes les vis (n'exercez pas de force excessive pour éviter de casser les vis ou d'endommager leur filetage).
12. Des trous et des boulons peuvent être laissés dans le mur, le plafond ou le sol une fois le produit retiré. Des taches peuvent apparaître après une utilisation prolongée.
13. Étant donné que le fabricant ne peut pas vérifier / superviser la qualité de la surface / du mur, du plafond ou du sol, ni la qualité d'installation du produit, la garantie du produit ne couvre que le produit lui-même, et non le fonctionnement du produit. La période de garantie du produit est de 5 ans.
14. Veuillez consulter le manuel pour tout différend sur les conditions.

IT ⚠ ATTENZIONE

1. Per garantire la sicurezza, leggere attentamente questo manuale prima dell'installazione e seguire le istruzioni. Conservare questo manuale in un luogo sicuro per riferimenti futuri.
2. Il produttore non sarà legalmente responsabile per eventuali danni alle apparecchiature o lesioni personali causati da installazione o funzionamento non corretti diversi da quelli descritti nel presente manuale.
3. Il prodotto è progettato per una facile installazione e rimozione. Il produttore non è responsabile per danni alle apparecchiature o lesioni personali derivanti da fattori umani o atti di natura, come terremoti o tifoni.
4. Si consiglia di installare il prodotto solo da personale qualificato.
5. Per installare o rimuovere il prodotto sono necessarie almeno due persone per evitare il rischio di caduta di oggetti.
6. Ispezionare attentamente l'area in cui il prodotto deve essere installato:
   - Evitare luoghi soggetti ad alte temperature, umidità o contatto con l'acqua.
   - Non installare il prodotto vicino a prese d'aria o aree con polvere e fumi in eccesso.
   - Installare solo su pareti verticali ed evitare superfici inclinate.
   - Non installare in luoghi soggetti a urti o vibrazioni.
   - Non installare in luoghi soggetti a esposizione diretta a luce intensa, in quanto potrebbe causare affaticamento degli occhi durante la visualizzazione del pannello del display.
7. Mantenere uno spazio sufficiente attorno al display per garantire un'adeguata ventilazione.
8. Per garantire un'installazione sicura, verificare innanzitutto la struttura della superficie, della parete, del soffitto o del pavimento e selezionare una posizione di montaggio sicura.
9. La superficie, la parete, il soffitto o il pavimento devono essere sufficientemente robusti da sostenere un peso di almeno quattro volte il display e il prodotto combinati. La posizione di montaggio deve essere in grado di resistere a terremoti o altri forti urti.
10. Non modificare alcun accessorio o utilizzare parti rotte. Contatta il tuo rivenditore per qualsiasi domanda.
11. Stringere tutte le viti (non esercitare una forza eccessiva per evitare di rompere la vite o danneggiarne la filettatura).
12. Una volta rimosso il prodotto, è possibile lasciare fori nella parete, nel soffitto o nel pavimento. Le macchie possono verificarsi dopo un uso prolungato.
13. Poiché il produttore non può verificare / supervisionare la qualità della superficie / parete, soffitto o pavimento né la qualità dell'installazione del prodotto, la garanzia del prodotto copre solo il prodotto stesso, non il funzionamento del prodotto. Il periodo di garanzia del prodotto è di 5 anni.
14. Consultare il manuale in lingua inglese per qualsiasi controversia relativa alle condizioni.

ES ⚠ PRECAUCIÓN

1. Para garantizar su seguridad, lea este manual cuidadosamente antes de la instalación y siga las instrucciones. Conserve este manual en un lugar seguro para futuras consultas.
2. El fabricante no será legalmente responsible de ningún daño producido sobre el equipo o lesión personal causada por una instalación o uso no mencionado explícitamente en este manual.
3. El soporte está diseñado para una fácil instalación y extracción. El fabricante no será responsable por daños al equipo o lesiones personales que surjan de factores humanos o actos de la naturaleza, como terremotos o tifones.
4. Se recomienda que el soporte sea instalado solo por personal cualificado.
5. Para evitar que se caiga el producto, la instalación o retirada deberá ser realizada por al menos dos personas.
6. Inspeccione detenidamente el área donde se instalará el soporte:
   - Evite los lugares sometidos a altas temperaturas, humedad o contacto con el agua.
   - No instale el producto cerca de ventiladores de aire acondicionado o áreas con exceso de polvo y humos.
   - Instalar solo en paredes verticales y evitar superficies inclinadas.
   - No instale en lugares sujetos a golpes o vibraciones.
   - No instale en lugares sometidos a la exposición directa a la luz brillante, ya que puede causar fatiga ocular al ver el panel de la pantalla.
7. Mantenga suficiente espacio alrededor de la pantalla para asegurar una ventilación adecuada.
8. Para garantizar una instalación segura, primero verifique la estructura de la pared, el techo o el piso y seleccione una ubicación de montaje segura.
9. La pared, el techo o el piso deben ser lo suficientemente fuertes para sostener un peso de al menos cuatro veces la pantalla y el montaje combinados. La ubicación de montaje debe ser capaz de resistir un terremoto o otro golpe fuerte.
10. No modifique ningún accesorio ni utilice componentes deteriorados. Póngase en contacto con su distribuidor si tiene alguna duda.
11. Apriete todos los tornillos (no ejerza demasiada fuerza para evitar que se roma el tornillo o se dañe la rosca).
12. Mantenga los orificios y los pernos en la pared, techo o suelo después de retirar la pantalla y el soporte. Podrían quedar manchas después de un uso prolongado.
13. Dado que el fabricante no tiene forma de controlar el tipo de pared, techo o piso y la instalación del soporte, la garantía del producto solo cubrirá el cuerpo del soporte. El periodo de garantía del producto es de 5 años.
14. Consulte el manual en inglés si tiene alguna duda acerca de las condiciones.

Neomounts®

USER MANUAL & TROUBLESHOOTING

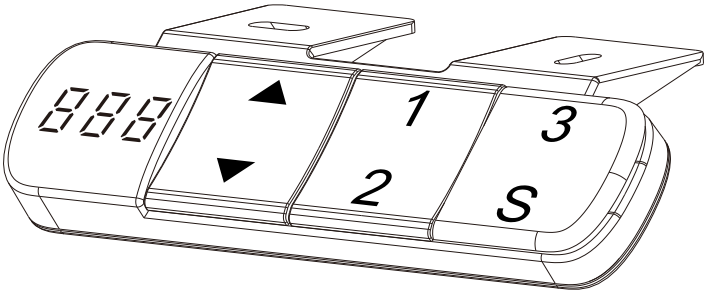

FL55-885BL1/WH1

WL55-885BL1/WH1

Digital control panel operating guide

Neomounts B.V.
Wateringweg 62, 2031 EJ Haarlem
The Netherlands | neomounts.com

1. Before You Start

The control panel uses button labels and display codes. The same labels are used throughout this manual.

Label	Meaning
▲	Raises the mount or moves upward through a setting menu
▼	Lowers the mount or moves downward through a setting menu
1 2 3	Memory position keys for stored heights
S	Settings/save key
000	Shows status, height values, menu codes, and error codes

Instruction term	Meaning
Press	Press and release the key once
Press repeatedly	Press and release the key until the specified display appears
Press and hold	Keep the key pressed until the specified display or movement occurs
Display alternates	The display switches between a code and the current value

⚠ **Warning:** Keep hands, cables, and obstacles clear while the mount is moving. Stop operation immediately if only one motorized leg responds, then unplug the unit and contact your local Neomounts sales representative.

Display values: Values from **000** to **100** correspond to the extension of the motorized legs. The selected unit setting determines whether the value is shown in centimeters or inches.

2. Standard Operation

2.1. Unlock the Control Panel

Step	Action	Result	Display
1	Connect the power	The display lights up and shows ***LOC***	LOC
2	Press and hold ▼ and S at the same time, for 5 seconds	The display changes to **000** or the previously set value	000
3	Release both keys	The control panel is unlocked	

2.2. Manual Height Adjustment

Note: The child lock is automatically reactivated after 10 seconds.

Step	Action	Result	Display
1	Press and hold ▲ to raise the mount	Release ▲ when the required height is reached. The display shows the set value	000
2	Press and hold ▼ to lower the mount	Release ▼ when the required height is reached. The display shows the set value	000

Note: During movement, the display shows a value between 000 and 100, representing the extension of the motorized legs.

2.3. Automatic Height Adjustment

Step	Action	Result	Display
1	Press memory key 1 , 2 , or 3	The mount moves automatically to the programmed position. The display counts towards the stored height value	000
2	Keep the area around the mount clear while it moves	Movement stops when the programmed position is reached. The display shows the stored height value	000
3	Press ▲ or ▼ to stop the automatic height adjustment	Movement stops immediately	

3. Memory Settings

Use memory settings to save frequently used height positions. Repeat the procedure for each memory key you want to program. To unlock the control panel, follow the instructions in step 2.1.

Step	Action	Result	Display
1	Use ▲ or ▼ to move the mount to the desired height	The selected height is shown on the display	000
2	Press and hold S for 5 seconds	The display shows **S - -**	S - -
3	Press the memory key to save: 1 , 2 , or 3	The display alternates between **S-1**, **S-2**, or **S-3** and the set value	S - 1 S - 2 S - 3
4	Press S	The selected height is saved to the chosen memory key	

4. Height Limitation Settings

The control panel can store an upper and lower height limit. Height limitations take precedence over stored memory positions.To unlock the control panel, follow the instructions in step 2.1.

Important: After a height limit is saved, automatic and manual movement will stop at that limit even if a memory position is stored outside the allowed range.

4.1. Set the Upper Height Limit

Step	Action	Result	Display
1	Press and hold S for 5 seconds	The display shows ***S - -***	S - -
2	Press ▲ repeatedly	***HLP*** flashes on the display (High Low Position)	HLP
3	Press 1	The display alternates between ***H-P*** and the set value	H-P
4	Press and hold ▲ or ▼ to set the maximum height	The display shows the selected maximum height	
5	Press S	The upper height limit is saved	

4.2. Set the Lower Height Limit

Step	Action	Result	Display
1	Press and hold S for 5 seconds	The display shows ***S - -***	S - -
2	Press ▲ repeatedly	***HLP*** flashes on the display (High Low Position)	HLP
3	Press 2	The display alternates between ***L-P*** and the set value	L-P
4	Press and hold ▲ or ▼ to set the maximum height	The display shows the selected minimum height	
5	Press S	The lower height limit is saved	

5. Reset Procedures

5.1. Soft Reset

Use a soft reset when the display shows **rES**, after reconnecting cables, or when the mount does not operate as expected.

Step	Action	Result	Display
1	Press and hold ▼	The display alternates between ***E-1*** and ***rES***	E-1 rES
2	Release ▼	The panel is ready to start the reset movement	
3	Press and hold ▼ again	The motorized legs move up and down automatically	
4	Release ▼ when a beep is heard	The soft reset is complete	

⚠ **Warning:** If the reset fails check the troubleshooting table. If only one motorized leg responds, stop immediately, unplug the unit, and contact your local Neomounts sales representative.

5.2. Factory Reset

⚠ **Warning:** A factory reset returns all memory setting values and advanced settings to their factory defaults. Any height limitation settings will be cleared.

Only perform this procedure if these settings may be reset.

Step	Action	Result	Display
1	Press and hold S for 15 seconds	The display shows ***FAC***	FAC
2	Press S again	A beep sounds. All configurable settings are restored to their factory defaults	

6. Advanced Settings

Warning: The advanced settings menu contains both user-configurable and factory-configured settings. Only the child lock setting is intended to be changed by the user.

The child lock helps prevent unintended operation. Neomounts B.V. is not liable for incidents caused when the child lock has been intentionally switched off.

The following settings are factory-configured and must not be changed:
- [A--] Anti-collision sensitivity
- [P--] Overcurrent protection
- [rES on/off] Power-loss reset behaviour

Changing these settings may result in unsafe operating conditions. If one of these settings has been changed unintentionally, perform the factory reset procedure as described in section 5.2.

6.1. Turn the Child Lock OFF

Step	Action	Result	Display
1	Press and hold S for 10 seconds	The display shows **A - -**	A - -
2	Press ▲	The display alternates between **LOC** and **ON**	LOC on
3	Press 2	The display alternates between **LOC** and **OFF**	LOC OFF
4	Press S	The child lock is switched off	

6.2. Turn the Child Lock ON

Step	Action	Result	Display
1	Press and hold S for 10 seconds	The display shows **A - -**	A - -
2	Press ▲	The display alternates between **LOC** and **OFF**	LOC OFF
3	Press 1	The display alternates between **LOC** and **ON**	LOC on
4	Press S	The child lock is switched off	

6.3. Change the Display Unit of Measure

Step	Action	Result	Display
1	Press and hold S for 5 seconds	The display shows **S - -**	S - -
2	Press ▲ repeatedly	The display shows **Unt**	Unt
3	Press 1 to select centimeters, or Press 2 to select inches	The display alternates between **Unt** and the current height value	Unt 000
4	Press S	The selected unit of measure is saved	

7. Troubleshooting and Error Codes

Use the table below when the display shows an error code or the mount does not operate as expected. If the error remains after the listed action, stop using the mount and contact your local Neomounts sales representative.

Code	Meaning	Possible cause	Action
E2	Anti-collision active	An obstacle is interfering with movement.	Remove the obstacle and check that the movement path is clear. Retry normal operation.
E3	Plug disconnection	The motorized legs are not connected to the control box.	Turn the power off. Plug the cables into the control box, reconnect power, and perform a soft reset.
E4	System imbalance	The height difference between the motorized legs exceeds 1 cm.	Stop operation and perform a soft reset. If only one motorized leg responds, stop immediately, unplug the unit, and contact your local Neomounts sales representative.
rES	Soft reset required	The system detected an error that requires a soft reset.	Perform the soft reset procedure.
Dut	Duty cycle protection	Overheating protection is active after continuous operation without the required cool down.	Let the system cool down for 18 minutes. Normal operation will be restored automatically. The display alternates between “dut” and the countdown timer, showing the remaining cooldown time in minutes.
Sot	Abnormal current detection	The system is overloaded or signal interference has occurred.	Remove the load from the mount and turn the power off. Reconnect all cables, turn the power back on, and retry normal operation.

8. Technical Data

Item	Data
Input voltage	100-240 V AC
Output voltage	29 V DC
Maximum load	1200 N | 120 kg
Height range | (floor < > mid VESA)	942 – 1942 mm | FL55-885BL1/WH1 808 – 1808 mm | WL55-885BL1/WH1
Duty cycle	2 min on / 18 min off

Duty cycle: Operate for no more than 2 minutes continuously, then allow an 18-minute cool-down period.

EN ⚠ CAUTION

1. To ensure safety, please read this manual carefully before installation and follow the instructions. Store this manual in a secure place for future reference.
2. The manufacturer shall not be legally responsible for any equipment damage or personal injury caused by incorrect installation or operation other than that covered in this manual.
3. The mount is designed for easy installation and removal. The manufacturer shall not be liable for damage to equipment or personal injuries arising out of human factors or acts of nature, such as earthquake or typhoon.
4. It is recommended that the mount be installed by qualified personnel only.
5. At least two persons are needed to install or remove the product to avoid hazard of falling objects.
6. Please carefully inspect the area where the mount is to be installed:
   - Avoid places that are subject to high temperatures, humidity or contact with water.
   - Do not install the product near air conditioning vents or areas with excess dust and fumes.
   - Only install on vertical walls and avoid slanted surfaces.
   - Do not install in places subject to any shock or vibration.
   - Do not install in places subject to direct exposure to bright light, as it may cause eye fatigue when viewing the display panel.
7. Maintain sufficient space around the display to ensure adequate ventilation.
8. To ensure safe installation, first check the structure of the wall, ceiling or floor and select a secure mounting location.
9. The wall, ceiling or floor should be strong enough to sustain a weight of at least four times of the display and mount combined. The mounting location must be able to withstand earthquake or other strong shock.
10. Do not modify any accessories or use broken parts. Contact your dealer with any questions.
11. Tighten all screws (do not exert excessive force to avoid breaking the screw or damaging its thread).
12. Drill holes and bolts will be left in the wall, ceiling or floor once the display and bracket are removed. Stains may occur after extended use.
13. Since the manufacturer has no way to control the wall, ceiling or floor type and installation of the mount, the warranty of the product shall only cover the body of the mount. The warranty period of the product is 5 years.
14. Please consult the English language manual for any dispute on conditions.

DE ⚠ VORSICHT

1. Um die Sicherheit zu gewährleisten, lesen Sie dieses Handbuch vor der Installation sorgfältig durch und befolgen Sie die Anweisungen. Bewahren Sie dieses Handbuch an einem sicheren Ort auf, damit Sie später darauf zurückgreifen können.
2. Der Hersteller ist rechtlich nicht verantwortlich für Geräteschäden oder Personenschäden, die durch eine andere als die in diesem Handbuch beschriebenen Installation oder Bedienung verursacht werden.
3. Das Produkt ist für eine einfache Installation und Demontage ausgelegt. Der Hersteller haftet nicht für Schäden an Geräten oder Personenschäden, die durch menschliche Faktoren oder Naturereignisse wie Erdbeben oder Taifun verursacht werden.
4. Es wird empfohlen, das Produkt nur durch qualifiziertes Personal zu installieren.
5. Zur Installation oder Demontage des Produktes sind mindestens zwei Personen erforderlich, um die Gefahr von herabfallenden Gegenständen zu vermeiden.
6. Bitte überprüfen Sie den Bereich, in dem das Produkt installiert werden soll sorgfältig:
   - Vermeiden Sie Orte die hohen Temperaturen, Feuchtigkeit oder Kontakt mit Wasser ausgesetzt sind.
   - Installieren Sie das Produkt nicht in der Nähe von Lüftungsschlitzen von Klimaanlagen oder Bereichen mit übermäßigem Staub und Rauch.
   - Installieren Sie das Produkt nur an eine vertikale Wand, Vermeiden Sie schräge Oberflächen.
   - Nicht an Orten installieren, die Erschütterungen oder Vibrationen ausgesetzt sind.
   - Nicht an Orten installieren die direkter Sonneneinstrahlung bzw. zu starkem Licht ausgesetzt sind, da dies beim Betrachten der Bildschirmanzeige zu Ermüdung der Augen führen kann.
7. Sorgen Sie für ausreichend Platz um das Display, um eine ausreichende Belüftung zu gewährleisten.
8. Um die Sicherheit zu gewährleisten und Unfälle zu vermeiden ist es notwendig vor der Installation die Wand-, Decken- oder Bodenstruktur zu überprüfen und eine sichere Stelle auszuwählen.
9. Die Oberfläche, Wand, Decke oder der Boden sollten stark genug sein, um ein Gewicht von mindestens dem Vierfachen des kombinierten Displays und des Montagesets zu tragen. Der Montageort muss Erdbeben oder anderen starken Erschütterungen stand halten können.
10. Modifizieren Sie kein Zubehör und verwenden Sie keine beschädigten Teile. Wenden Sie sich bei Fragen bitte an Ihren Händler.
11. Ziehen Sie alle Schrauben fest (üben Sie keine übermäßige Kraft aus, um ein Brechen der Schraube oder eine Beschädigung des Gewindes zu vermeiden).
12. Nach dem Entfernen des Produktes können Löcher und Schrauben in Wand, Decke oder Boden verbleiben. Nach längerem Gebrauch können Flecken auftreten.
13. Der Hersteller hat keinen Einfluss auf die Wand-, Decken- oder Bodenart und die Installation der Halterung. Deshalb deckt die Garantie des Produktes nur das Produkt selbst ab. Die Garantiezeit des Produktes beträgt 5 Jahre.
14. Bei Streitigkeiten über die Bedingungen ziehen Sie bitte das englischsprachige Handbuch hinzu.

FR ⚠ ATTENTION

1. Pour assurer la sécurité, veuillez lire attentivement ce manuel avant l'installation et suivre les instructions. Conservez ce manuel dans un endroit sûr pour un besoin ultérieur.
2. Le fabricant ne sera pas légalement responsable de tout dommage à l'équipement ou de blessure corporelle causé par une installation ou une utilisation incorrecte autre que celles préconisées dans ce manuel.
3. Le produit est conçu pour une installation et un démontage faciles. Le fabricant ne peut être tenu responsable des dommages à l'équipement ou des blessures corporelles résultant de facteurs humains ou d'actes de nature, tels qu'un tremblement de terre ou un typhon.
4. Il est recommandé que le produit soit installé uniquement par du personnel qualifié.
5. Au moins deux personnes sont nécessaires pour installer ou démonter le produit afin d'éviter tout risque de chute d'objets.
6. Veuillez inspecter soigneusement la zone où le produit doit être installé:
   - Évitez les endroits soumis à des températures élevées, à l'humidité ou au contact avec de l'eau.
   - N'installez pas le produit à proximité de bouches de climatisation ou de zones avec un excès de poussière et de fumées.
   - Installez uniquement sur des murs verticaux et évitez les surfaces inclinées.
   - Ne pas installer dans des endroits soumis à des chocs ou des vibrations.
   - Ne l'installez pas dans des endroits soumis à une exposition directe à la lumière vive, car cela peut provoquer une fatigue oculaire lors de la visualisation des écrans d'affichage.
7. Maintenez un espace suffisant autour de l'écran pour assurer une ventilation adéquate.
8. Pour garantir une installation sûre, vérifiez d'abord la structure de la surface, du mur, du plafond ou du sol et sélectionnez un emplacement de montage sécurisé.
9. La surface, le mur, le plafond ou le sol doivent être suffisamment solides pour supporter un poids d'au moins quatre fois l'écran et le produit combinés. L'emplacement de montage doit pouvoir résister aux tremblements de terre ou à d'autres chocs violents.
10. Ne modifiez aucun accessoire et n'utilisez pas de pièces cassées. Contactez votre revendeur pour toute question à ce sujet.
11. Serrez toutes les vis (n'exercez pas de force excessive pour éviter de casser les vis ou d'endommager leur filetage).
12. Des trous et des boulons peuvent être laissés dans le mur, le plafond ou le sol une fois le produit retiré. Des taches peuvent apparaître après une utilisation prolongée.
13. Étant donné que le fabricant ne peut pas vérifier / superviser la qualité de la surface / du mur, du plafond ou du sol, ni la qualité d'installation du produit, la garantie du produit ne couvre que le produit lui-même, et non le fonctionnement du produit. La période de garantie du produit est de 5 ans.
14. Veuillez consulter le manuel pour tout différend sur les conditions.

IT ⚠ ATTENZIONE

1. Per garantire la sicurezza, leggere attentamente questo manuale prima dell'installazione e seguire le istruzioni. Conservare questo manuale in un luogo sicuro per riferimenti futuri.
2. Il produttore non sarà legalmente responsabile per eventuali danni alle apparecchiature o lesioni personali causati da installazione o funzionamento non corretti diversi da quelli descritti nel presente manuale.
3. Il prodotto è progettato per una facile installazione e rimozione. Il produttore non è responsabile per danni alle apparecchiature o lesioni personali derivanti da fattori umani o atti di natura, come terremoti o tifoni.
4. Si consiglia di installare il prodotto solo da personale qualificato.
5. Per installare o rimuovere il prodotto sono necessarie almeno due persone per evitare il rischio di caduta di oggetti.
6. Ispezionare attentamente l'area in cui il prodotto deve essere installato:
   - Evitare luoghi soggetti ad alte temperature, umidità o contatto con l'acqua.
   - Non installare il prodotto vicino a prese d'aria o aree con polvere e fumi in eccesso.
   - Installare solo su pareti verticali ed evitare superfici inclinate.
   - Non installare in luoghi soggetti a urti o vibrazioni.
   - Non installare in luoghi soggetti a esposizione diretta a luce intensa, in quanto potrebbe causare affaticamento degli occhi durante la visualizzazione del pannello del display.
7. Mantenere uno spazio sufficiente attorno al display per garantire un'adeguata ventilazione.
8. Per garantire un'installazione sicura, verificare innanzitutto la struttura della superficie, della parete, del soffitto o del pavimento e selezionare una posizione di montaggio sicura.
9. La superficie, la parete, il soffitto o il pavimento devono essere sufficientemente robusti da sostenere un peso di almeno quattro volte il display e il prodotto combinati. La posizione di montaggio deve essere in grado di resistere a terremoti o altri forti urti.
10. Non modificare alcun accessorio o utilizzare parti rotte. Contatta il tuo rivenditore per qualsiasi domanda.
11. Stringere tutte le viti (non esercitare una forza eccessiva per evitare di rompere la vite o danneggiarne la filettatura).
12. Una volta rimosso il prodotto, è possibile lasciare fori nella parete, nel soffitto o nel pavimento. Le macchie possono verificarsi dopo un uso prolungato.
13. Poiché il produttore non può verificare / supervisionare la qualità della superficie / parete, soffitto o pavimento né la qualità dell'installazione del prodotto, la garanzia del prodotto copre solo il prodotto stesso, non il funzionamento del prodotto. Il periodo di garanzia del prodotto è di 5 anni.
14. Consultare il manuale in lingua inglese per qualsiasi controversia relativa alle condizioni.

ES ⚠ PRECAUCIÓN

1. Para garantizar su seguridad, lea este manual cuidadosamente antes de la instalación y siga las instrucciones. Conserve este manual en un lugar seguro para futuras consultas.
2. El fabricante no será legalmente responsible de ningún daño producido sobre el equipo o lesión personal causada por una instalación o uso no mencionado explícitamente en este manual.
3. El soporte está diseñado para una fácil instalación y extracción. El fabricante no será responsable por daños al equipo o lesiones personales que surjan de factores humanos o actos de la naturaleza, como terremotos o tifones.
4. Se recomienda que el soporte sea instalado solo por personal cualificado.
5. Para evitar que se caiga el producto, la instalación o retirada deberá ser realizada por al menos dos personas.
6. Inspeccione detenidamente el área donde se instalará el soporte:
   - Evite los lugares sometidos a altas temperaturas, humedad o contacto con el agua.
   - No instale el producto cerca de ventiladores de aire acondicionado o áreas con exceso de polvo y humos.
   - Instalar solo en paredes verticales y evitar superficies inclinadas.
   - No instale en lugares sujetos a golpes o vibraciones.
   - No instale en lugares sometidos a la exposición directa a la luz brillante, ya que puede causar fatiga ocular al ver el panel de la pantalla.
7. Mantenga suficiente espacio alrededor de la pantalla para asegurar una ventilación adecuada.
8. Para garantizar una instalación segura, primero verifique la estructura de la pared, el techo o el piso y seleccione una ubicación de montaje segura.
9. La pared, el techo o el piso deben ser lo suficientemente fuertes para sostener un peso de al menos cuatro veces la pantalla y el montaje combinados. La ubicación de montaje debe ser capaz de resistir un terremoto o otro golpe fuerte.
10. No modifique ningún accesorio ni utilice componentes deteriorados. Póngase en contacto con su distribuidor si tiene alguna duda.
11. Apriete todos los tornillos (no ejerza demasiada fuerza para evitar que se roma el tornillo o se dañe la rosca).
12. Mantenga los orificios y los pernos en la pared, techo o suelo después de retirar la pantalla y el soporte. Podrían quedar manchas después de un uso prolongado.
13. Dado que el fabricante no tiene forma de controlar el tipo de pared, techo o piso y la instalación del soporte, la garantía del producto solo cubrirá el cuerpo del soporte. El periodo de garantía del producto es de 5 años.
14. Consulte el manual en inglés si tiene alguna duda acerca de las condiciones.